FRONTLINE TEST SYSTEM™

SETUP AND QUICK START GUIDE

RS-422/485 COMPROBE

04-August-10 300-DOC-SL-007

Copyright © 2000-2010 Frontline Test Equipment, Inc. All rights reserved. You may not reproduce, transmit, or store on magnetic media any part of this publication in any way without prior written authorization of Frontline Test Equipment, Inc.

FTS, Frontline, Frontline Test System, and ComProbe are registered trademarks of Frontline Test Equipment, Inc. FTS4BT is a trademark of Frontline Test Equipment, Inc.

All other trademarks and registered trademarks are property of their respective owners.

Minimum System Requirements

* PC with Windows XP (Service Pack 2 or higher), Windows Vista (32 bit) or Windows 7 (32 bit/64 bit)
* Pentium 1 GHz processor or higher
* RAM Requirements: 1GB minimum, 2GB recommended
* 50 MB free Hard Disk Space (for the analyzer software)
* One USB 2.0 Port

Table of Contents

Minimum System Requirements ***ii***

Introduction ***1***

ComProbe Installation Instructions ***2***

RS-422/485 ComProbe II Driver Installation **2**

RS-422/485 ComProbe Installation on XP **2**

RS-422/485 ComProbe Diver Installation on Windows 7 **7**

Software Installation ***14***

Hardware Setup and Configuration ***15***

Cabling for 2 Wire RS 422/485: **15**

Cabling for 4 Wire RS 422/485 **16**

Hardware Settings ***17***

I/O Settings ***18***

Technical Support ***20***

Table of Figures

Figure 1 Install Wizard Welcome *2*
Figure 2 Found New Hardware Wizard Dialog *3*
Figure 3- Browse *3*
Figure 4 - Directory Structure *4*
Figure 5 - Install From Disk *4*
Figure 6 - Locate File *5*
Figure 7 - Install From Disk *5*
Figure 8 - Select ComProbe *6*
Figure 9 - Finished Installation *7*
Figure 10 - Device Manager *8*
Figure 11 - Update Driver Software *8*
Figure 12 - Browse my computer… *9*
Figure 13- Let me pick… *9*
Figure 14 - Have Disk *10*
Figure 15 - Install From Disk *10*
Figure 16 - Serial ComProbe Folder *11*
Figure 17 - Install From Disk *11*
Figure 18 - Select Model *12*
Figure 19 - Software Loading - Win7 ..... *12*
Figure 20- Windows Security Warning *13*
Figure 21 - Installation Complete *13*

Figure 22- Cabling for 2 Wire RS-422/485 ..... *15*
Figure 23 - Cabling for 4 Wire RS-422/485..... *16*
Figure 24 - Hardware Settings..... *17*
Figure 25 - I/O Settings..... *18*

Introduction

Welcome to Frontline Test System™ (FTS) *RS-422/485 ComProbe Quick Start Guide*.

This Quick Start Guide contains device installation and configuration information for the RS-422/485 ComProbe.

To access the PDF version of this Quick Start Guide from your Windows operating system, click *Start* | *Programs* | *Serialtest Async* [version#] | *Setup* | *RS-422-485 ComProbe QSG.pdf or Start* | *Programs* | *NetDecoder* [version#] | *Setup* | *RS-422-485 ComProbe QSG.pdf*

RS-422/485 ComProbe II Driver Installation

There are two install procedures for the RS-422/485 ComProbe: one for **XP** and one for **Windows 7.**

RS-422/485 ComProbe Installation on XP

1. Insert the product CD into the PC.
2. Plug the *ComProbe into a USB* port.

The *Found New Hardware Wizard* dialogue box appears.

Figure 1 Install Wizard Welcome

3. Choose *No, not this time*
4. Click *Next*.

Figure 2 Found New Hardware Wizard Dialog

5. Choose *Install from a list or specific location*
6. Click *Next*.

Now you have to locate the RS-422/485 ComProbe driver.

Figure 3- Browse

7. Select *Don't search, I will choose the driver to install*.
8. Click *Next*.

The next *Found New Hardware Wizard* dialog appears.

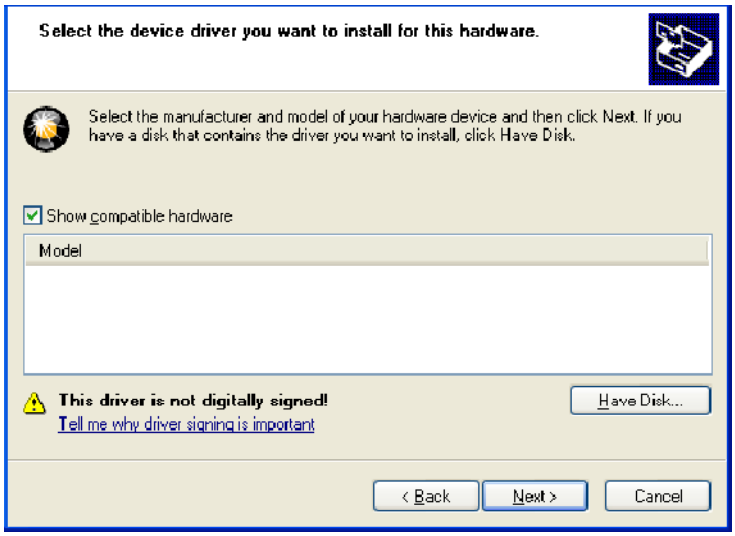

Figure 4 - Directory Structure

9. Select *Have Disk.*

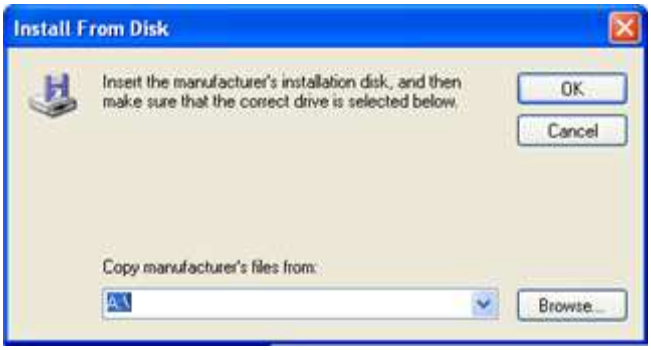

Figure 5 - Install From Disk

Now you have to locate the driver for your ComProbe.

10. Select *Browse*.

The driver is located on your product CD at: **Serialtest\Drivers\Serial ComProbe or NetDecoder\Drivers\Serial ComProbe**. This directory contains the Windows driver information file needed to install the driver.

Figure 6 - Locate File

11. Select the *Serial_ComProbes.inf.*
12. Click *Open*.

Figure 7 - Install From Disk

Back at the previous dialog the location of the directory you just chose appears in the text box next to the Browse button.

13. Select *OK* to continue the installation.

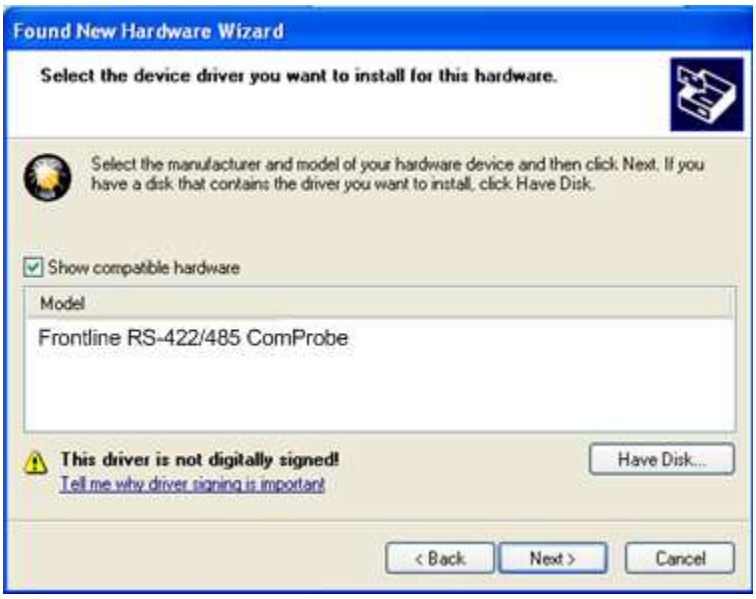

Figure 8 - Select ComProbe

The name of the ComProbe will be displayed under **Model.**

Note: If Frontline RS-422/485 ComProbe is the only device listed, you do not have to select a model. If other devices are listed, you must select the model before selecting Next.

14. Select *Frontline RS-422/485 ComProbe* under **Model**.
15. Click the *Next* button to continue the installation.

Note: If you get a dialog box questioning the software integrity, don't worry—Click *Continue Anyway*.

Your computer will now install the RS-422/485 ComProbe driver from the directory you selected; you'll get a dialog box saying that the installation is finished.

Figure 9 - Finished Installation

16. Click the *Finish* button to close the wizard.

The installation of the RS-422/485 ComProbe driver is now complete.

Your computer will remember this USB application. The next time you insert the RS-422/485 ComProbe , it will automatically find the appropriate interface driver.

RS-422/485 ComProbe Diver Installation on Windows 7

The procedure for installing the ComProbe driver is different on Windows 7 than it is for XP. Follow the steps below.

1. Insert the *product CD* into the PC.
2. Plug the *ComProbe into a USB* port.

Note: Depending on how your PC is set up, you will either see a message indicating that the driver software was not installed, or that it was installed sucessfully. Whatever the case:

3. Close the dialog.
4. Go to the Control Panel and open the *Device Manager*.

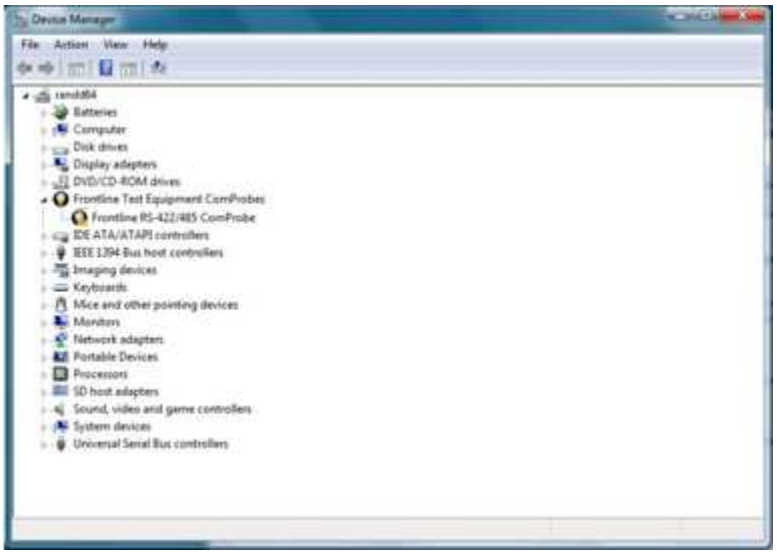

Figure 10 - Device Manager

5. Right click on *RS-422/485 ComProbe* under Frontline Test Equipment ComProbes and select *Update Driver Software.*

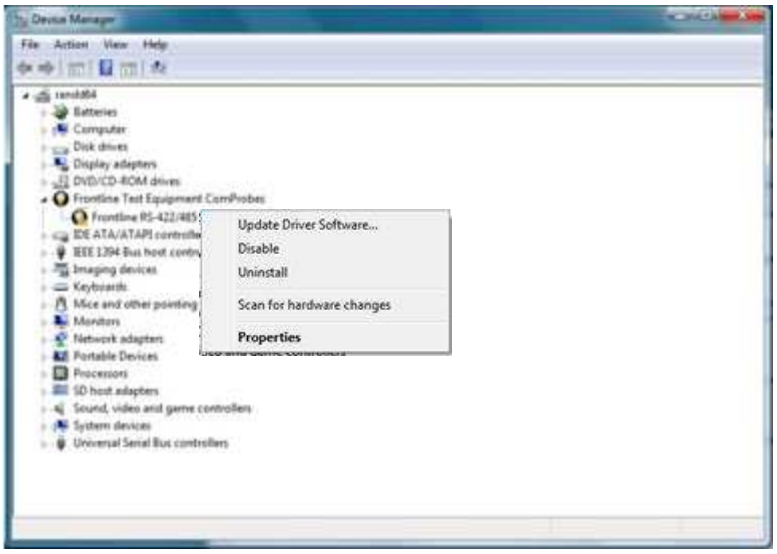

Figure 11 - Update Driver Software

The next step is to choose the driver location.

Figure 12 - Browse my computer…

6. Select *Browse my computer for driver software.*

Figure 13- Let me pick…

7. On this dialog, select *Let me pick from a list of device drivers on my computer*.

Figure 14 - Have Disk

8. Select *Have Disk*.

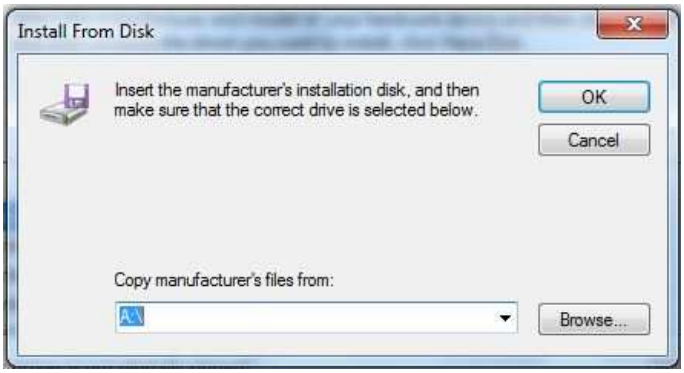

Figure 15 - Install From Disk

9. On the **Install From Disk** dialog select *Browse.*

The driver is located on your product CD at: **Serialtest\Drivers\Serial ComProbe or NetDecoder\Drivers\Serial ComProbe**. This directory contains the Windows driver information file needed to install the driver.

10. Open the *Serial ComProbes* folder

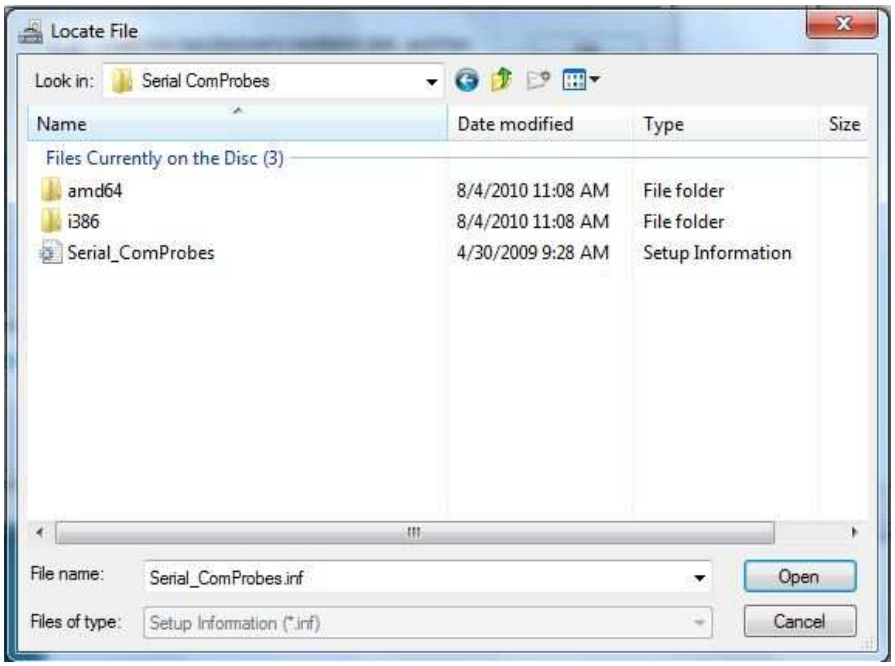

Figure 16 - Serial ComProbe Folder

11. Click on the *Serial_ComProbes* file
12. Select *Open.*

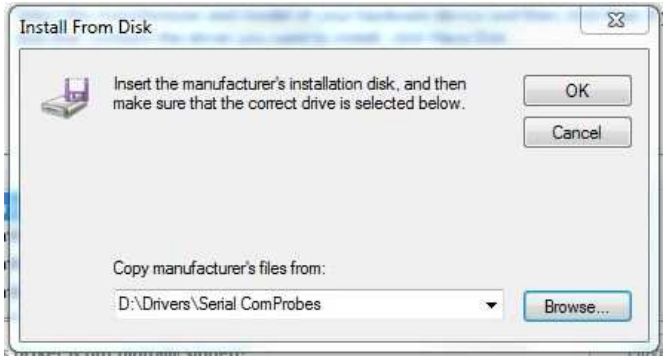

Figure 17 - Install From Disk

13. On the **Install From Disk** dialog select *OK*.

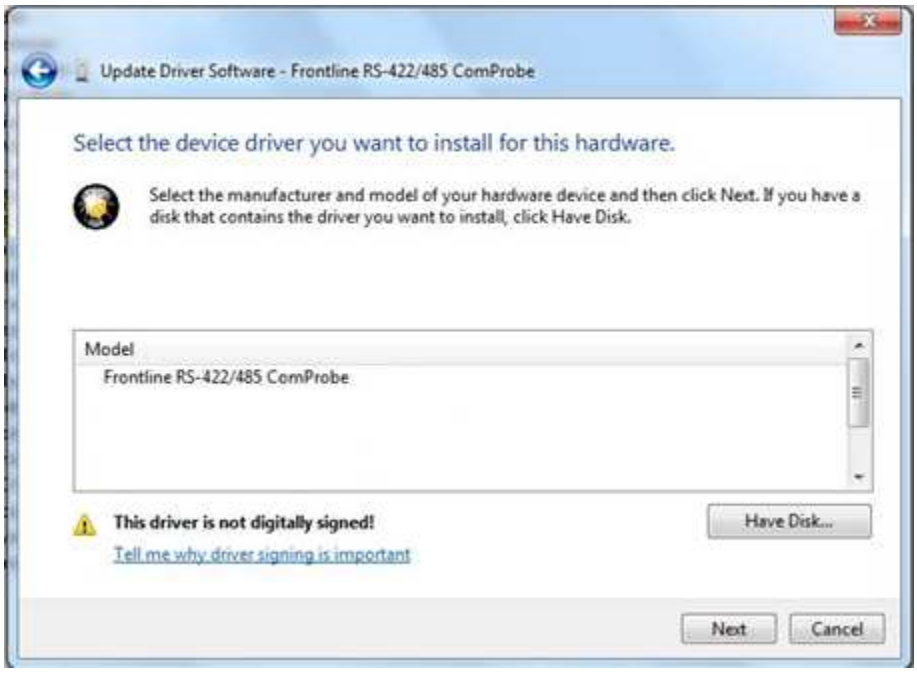

Figure 18 - Select Model

14. Select *Frontline RS-422/485* under **Model**.

Note: If Frontline RS-422/485 ComProbe is the only device listed, you do not have to select a model. If other devices are listed, you must select the model before selecting Next.

15. Then select *Next*.

Once the driver starts to load,

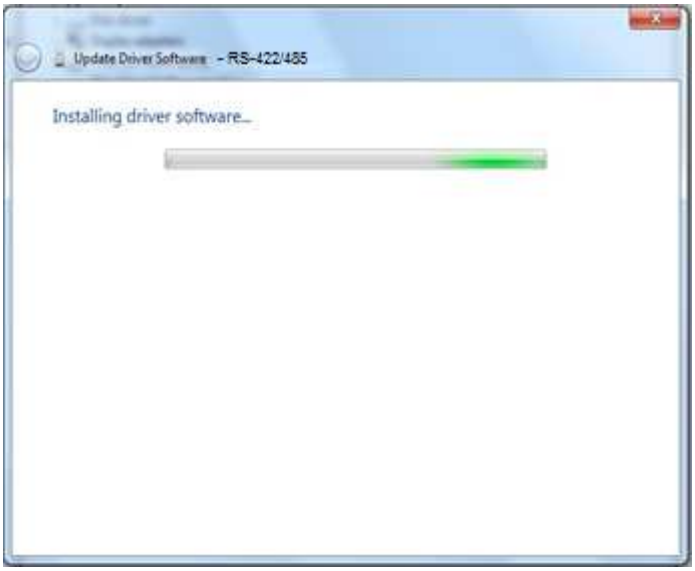

Figure 19 - Software Loading - Win7

you may get a Windows Security warning.

Figure 20- Windows Security Warning

16. You can ignore this warning by selecting **Install this driver software anyway**.

Your computer will now install the ComProbe driver from the directory you selected; you will get a dialog box saying that the installation is finished.

Figure 21 - Installation Complete

17. Click the *Close* button to close the wizard.

Software Installation

Please refer to the installation and activation instructions in **Installing Frontline Test System (FTS) Products** in the installation folder.

The installation of your FTS product creates a folder on your desktop.

1. Open the desktop folder and double-click the shortcut labeled *Frontline NetDecoder*.
2. FTS displays the *Choose Protocol to Analyze* dialog that contains a list of the available protocols.
3. Expand the folder containing the desired protocol and select the protocol stack.
4. Select a capture method from the *Data Capture Method* selection pane below the list window (if necessary).
5. Check the *Create Shortcut When Run* checkbox if you like and click the *Run* button (if you choose to create a shortcut, the system creates one and places it in the desktop folder).

Alternatively, you can access the *Choose Protocol to Analyze* dialog from your Windows operating system by clicking *Start* | *Programs* |*NetDecoder* [version#] |*Frontline NetDecoder*. Then select the protocol from the displayed list. Consult the online Help for additional information on choosing protocols.

Cabling for 2 Wire RS 422/485:

The Frontline software expects to see the transmit lines of your circuit connected to the corresponding receive pins on the RS-422/485 ComProbe. Tap off of the Transmit + line (TX+) of your circuit, and connect that to pin 1 (RX+) on the RS-422/485 ComProbe, then tap off of the Transmit - line (TX-) and connect that to pin 2 (RX-) on the RS-422/485 ComProbe.

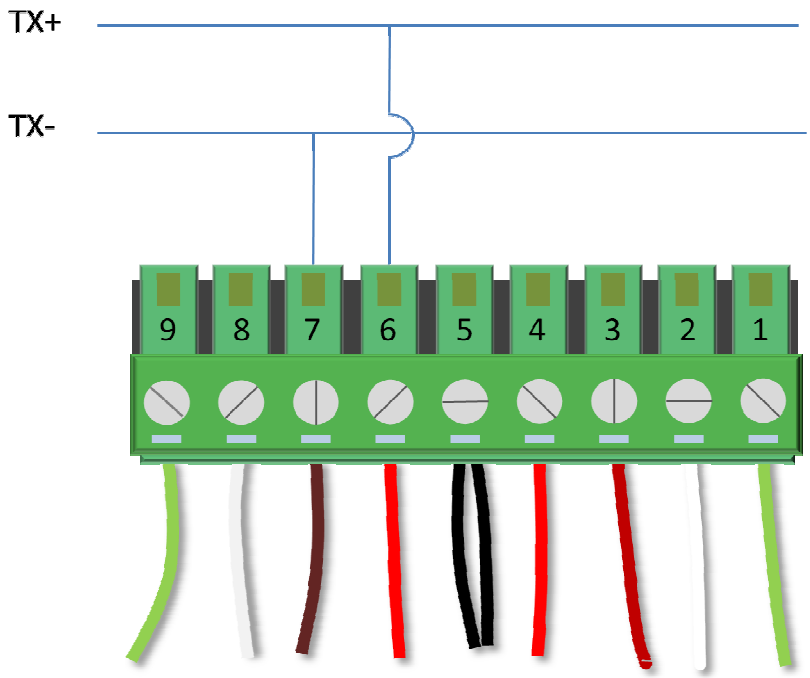

Signal Definitions

PIN	RS 422/485
1	TX+
2	TX-
3	RTS+
4	RTS-
5	GND
6	RX+
7	RX-
8	CTS+
9	CTS-

Figure 22- Cabling for 2 Wire RS-422/485

Cabling for 4 Wire RS 422/485

For a four wire circuit, the procedure is the same. Tap off of the Transmit + line (TX+) of your circuit, and connect that to pin 1 (RX+) on the RS-422/485 ComProbe, then tap off of the Transmit - line (TX-) and connect that to pin 2 (RX-) on the RS-422/485 ComProbe. Do the same with the Receive lines, tap off of the RX+ and connect that to pin 1 on the RS-422/485 ComProbe then tap RX- and send it to pin 2 on the RS-422/485 ComProbe.

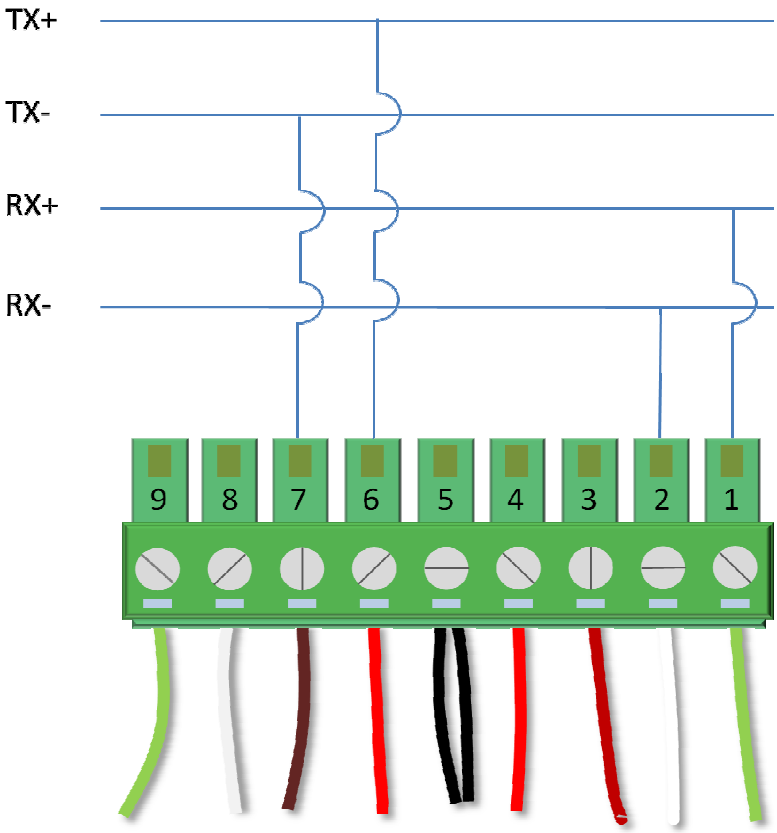

Signal Definitions

PIN	RS 422/485
1	TX+
2	TX-
3	RTS+
4	RTS-
5	GND
6	RX+
7	RX-
8	CTS+
9	CTS-

Figure 23 - Cabling for 4 Wire RS-422/485

Hardware Settings

The Hardware Settings dialog is used to select a device to sniff/scan. The first time you run the program, the Hardware Settings window appears. You can change any of the hardware settings, at anytime, by choosing *Options* | *Hardware Settings* from the Control window.

1. Select *Hardware Settings* from the Options menu on the Control window.

Figure 24 - Hardware Settings

2. Select *a device* from the drop-down list.
3. Select *OK.*

If no devices are found, the list will be blank. You can also select **Refresh List** to make sure the list is complete.

I/O Settings

Before you can begin capturing data, you must set the data rate and several other variables. You provide this information in the I/O Settings window.

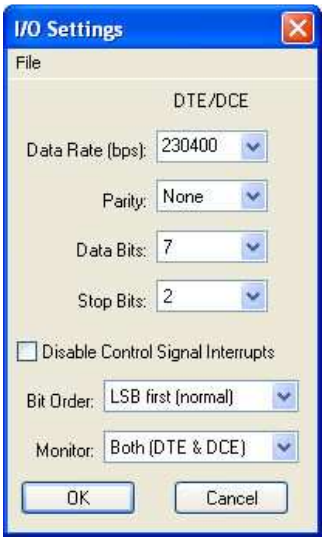

Figure 25 - I/O Settings

1. Click on the I/O Settings icon on the Control window toolbar, or choose I/O Settings from the Options menu.

2. For the **Data Rate (bps)**, select a rate from *300 to 921,600* or enter a unique data rate up to *954,861*.

Data Rates supported by the RS-232 ComProbe II include:

300 – 220000
220353 – 238715
240385 – 260416
264424 - 286458
293804 - 318287
330529 - 358072
377748 - 409226
440706 - 477430
528847 - 572916
661058 - 716145
881411 - 954861

3. For **Parity**, select *None, Odd, Even, Mark* or *Space*. **None** is the default.

4. For Data Bits (size of the bits), select *5, 6, 7*, or *8*. **Eight** is the default.

5. For **Stop Bits** (end point of the bit) select 1, 1.5, or 2. One is the default

6. If you want to disable the **Control Signal Interrupts**, select the checkbox.

7. For **Bit Order**, select LSB (Least Significant Bit) or MSB (Most Significant Bit).

8. For **Monitor**, select Capture DTE (Data Terminal Equipment), Capture DCE (Data Communication Equipment, or Both (DCE & DTE)

9. Click the **OK** button on the I/O Settings window top close the dialog.

Technical Support

Technical support is available in several ways. The online help system provides answers to many user related questions. Frontline's website has documentation on common problems, as well as software upgrades and utilities to use with our products.

Web: http://www.fte.com, click Support

Email: tech_support@fte.com

If you need to talk to a technical support representative, support is available between 9am and 5pm, U.S. Eastern time, Monday through Friday. Technical support is not available on U.S. national holidays.

Phone: +1 (434) 984-4500

Fax: +1 (434) 984-4505